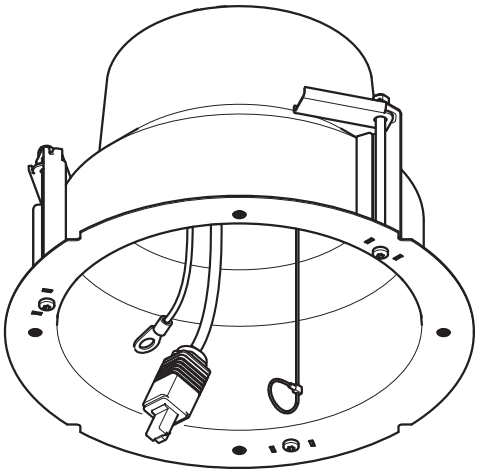

Installation Guide	Ver. 2.0
AXIS T94A02L Recessed Mount	Date: January, 2015
© Axis Communications AB, 2014	Part No. 61422

1

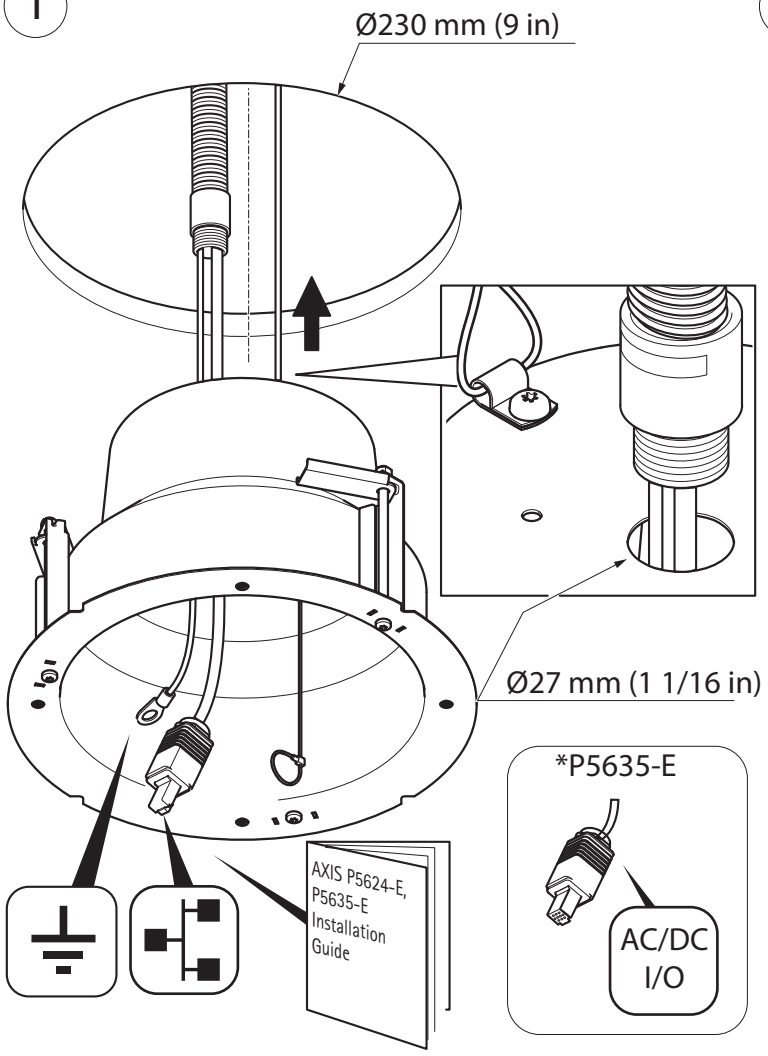
Ø230 mm (9 in)
Ø27 mm (1 1/16 in)
AXIS P5624-E, P5635-E Installation Guide
*P5635-E
AC/DC
I/O

2

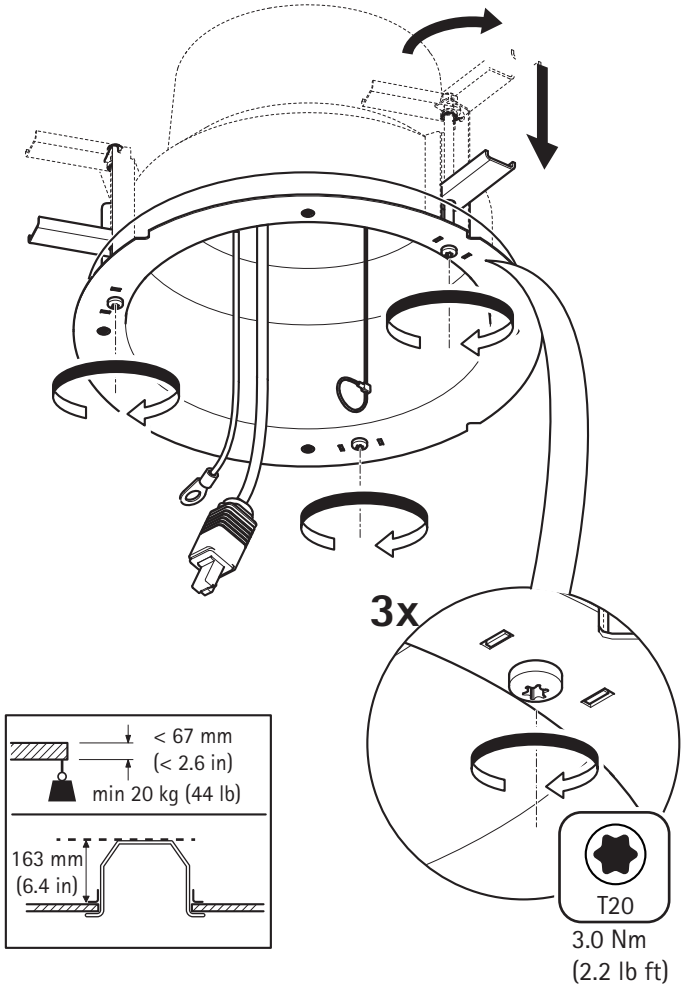
3x
< 67 mm
(< 2.6 in)
min 20 kg (44 lb)
163 mm
(6.4 in)
T20
3.0 Nm
(2.2 lb ft)

3

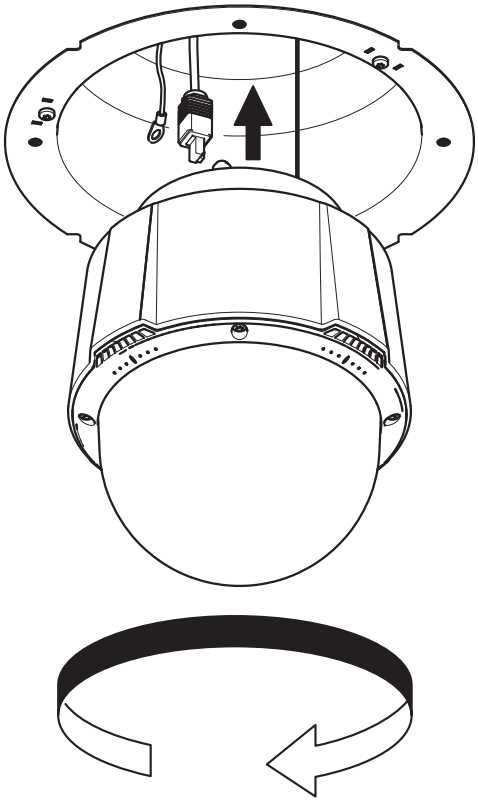

4

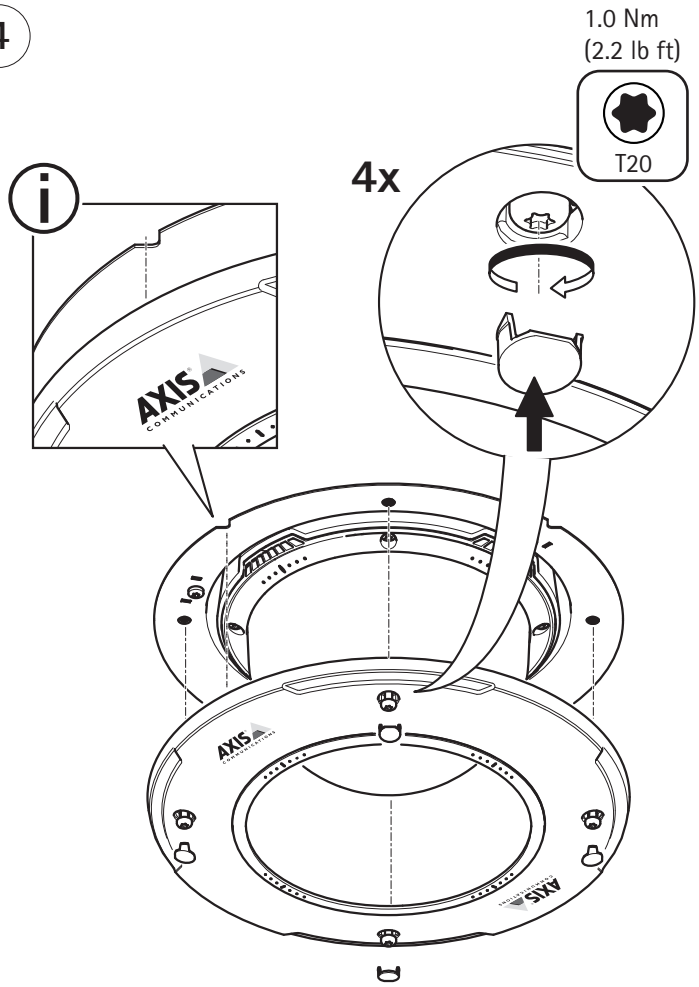
1.0 Nm
(2.2 lb ft)
T20
4x
AXIS
COMMUNICATIONS